CERAFLEX

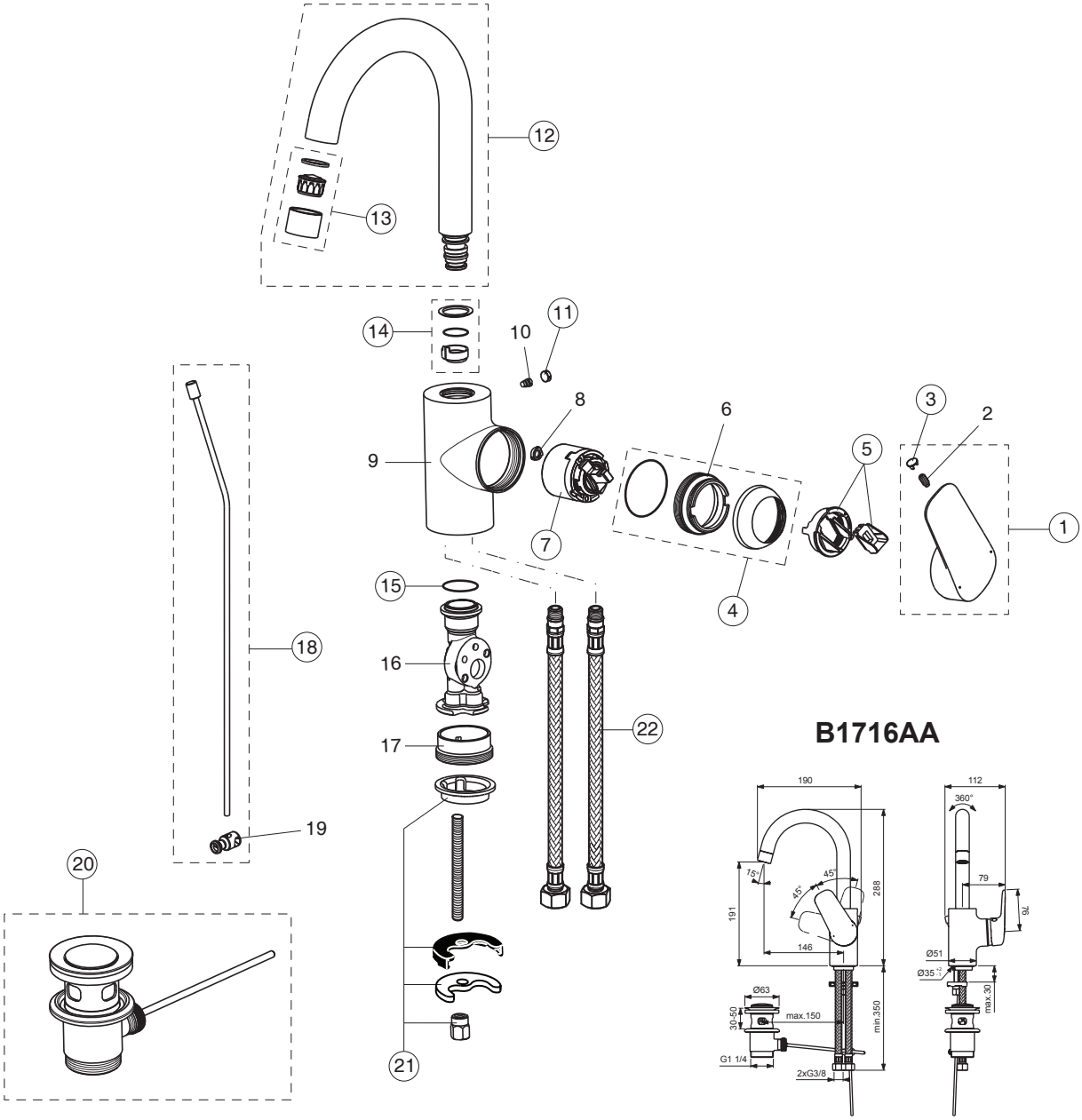

Pos.	Signify	Spare parts-Nr.	Quantity	Pos.	Signify	Spare parts-Nr.	Quantity
1	Lever,w/logo-set	B961379AA	1 Pcs.	15	O-Ring Ø25x1.5	A962496NU	1 Pcs.
2	Screw M5x8		1 Pcs.	16	Manifold		1 Pcs.
3	Cap decorative	B960473AA	1 Pcs.	17	Screw M43x1.5		1 Pcs.
4	Rosette-compl.	B961113AA	1 Pcs.	18	Pop up waste-compl.	B961384AA	1 Pcs.
5	Eco click set Ø40	B960477NU	1 Pcs.	19	Pop up waste shackle		1 Pcs.
6	Screw M41x1.5/M46x1.5		1 Pcs.	20	Pop-up drain ass.	A962991AA	1 Pcs.
7	Cartridge Ø40mm	B964932NU	1 Pcs.	21	Connecting set	B960608NU	1 Set
8	Pin		1 Pcs.	22	Flex pexhose G3/8-M10x1/L445mm	A963600NU	1 Pcs.
9	Body basin		1 Pcs.				
10	Screw M5x5.5		1 Pcs.				
11	Rubber cap Ø8.1x3	B960583NU	1 Pcs.				
12	Tub.spout R145mm	B961385AA	1 Pcs.				
13	Aerator M22x1-A	B960294AA	1 Pcs.				
14	Sealing set for tub.spout	B960295NU	1 Pcs.				