SPIROVENT Deaerator

SPIROTECH

Mounting and operating instruction

For article no's starting with AA, except for AAS
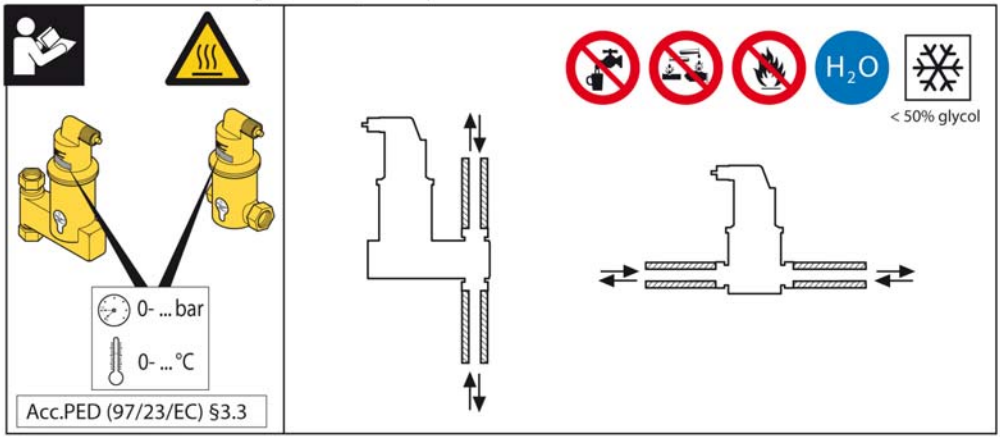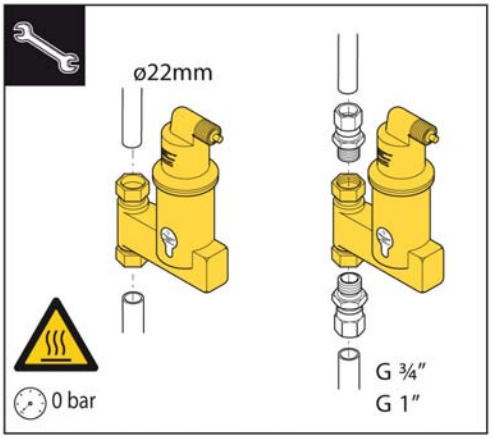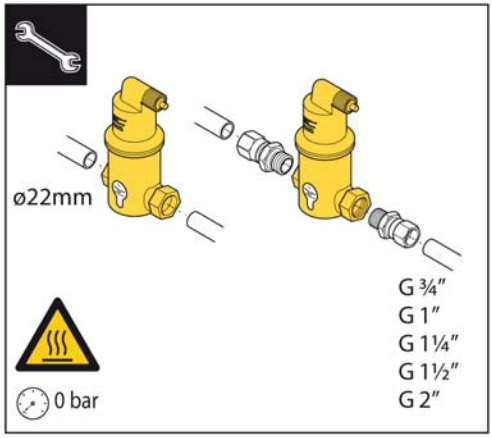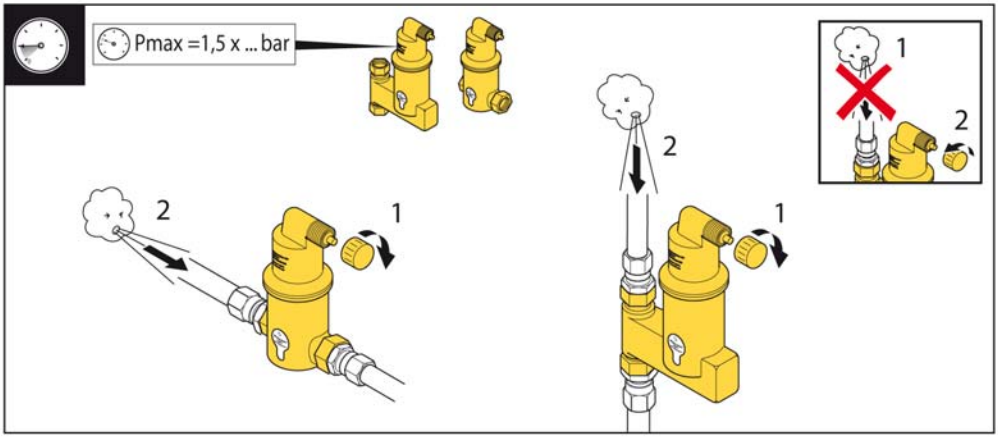
17.657-01